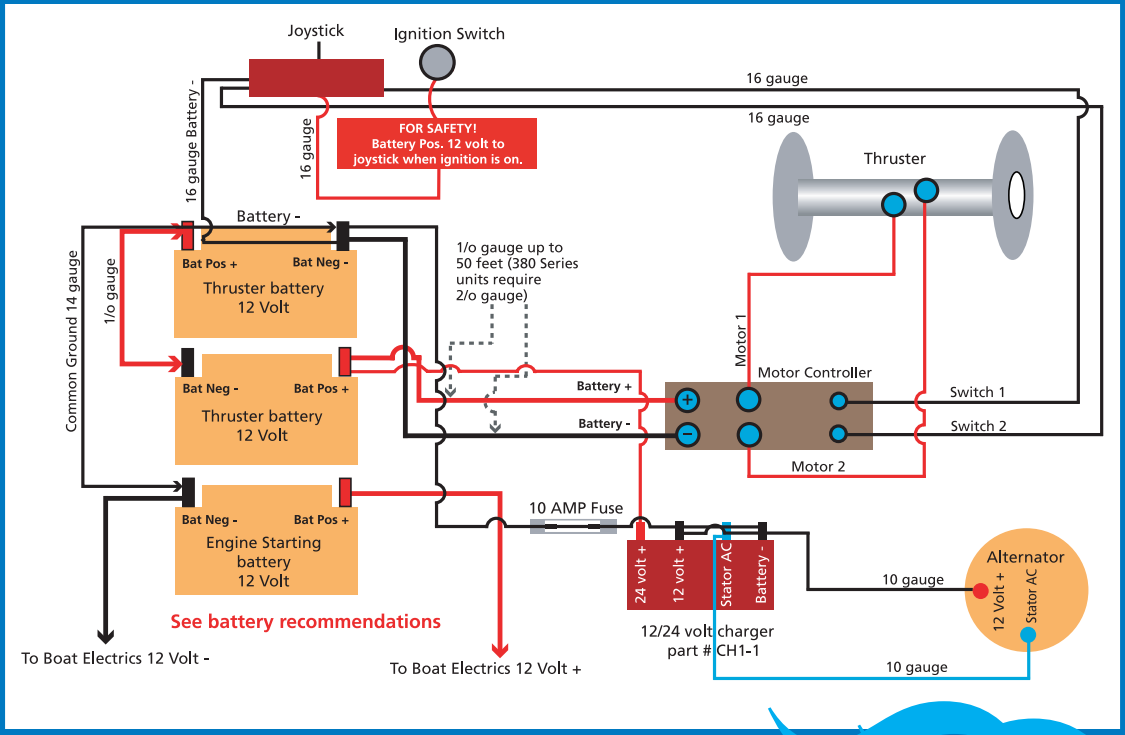TRIGGER LOGIC: 24 Volt for models SS350 BOW / SS380 BOW / ST350 STERN / ST380 STERN